mm [inch]

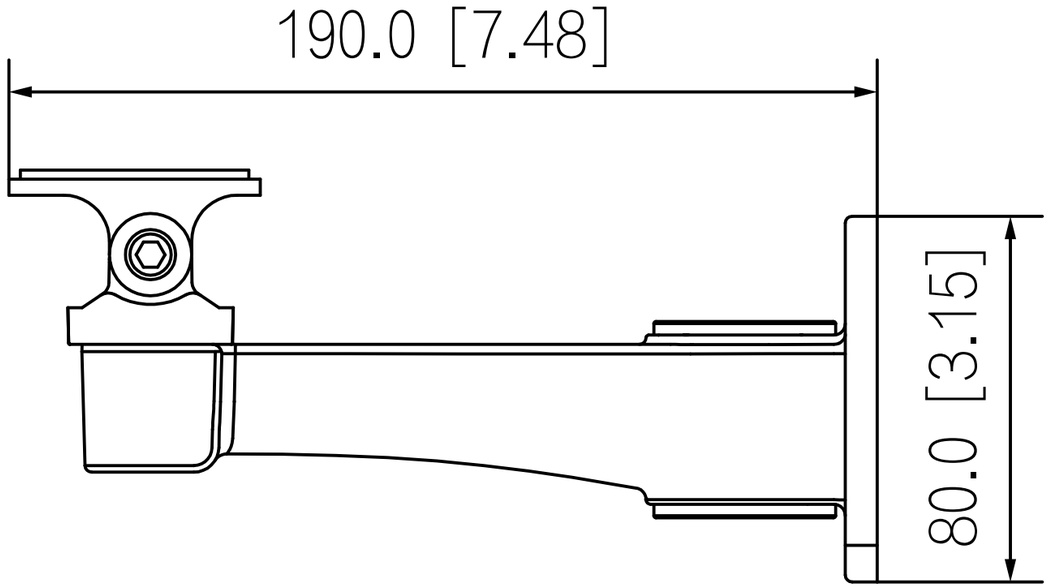
190.0 [7.48]
80.0 [3.15]

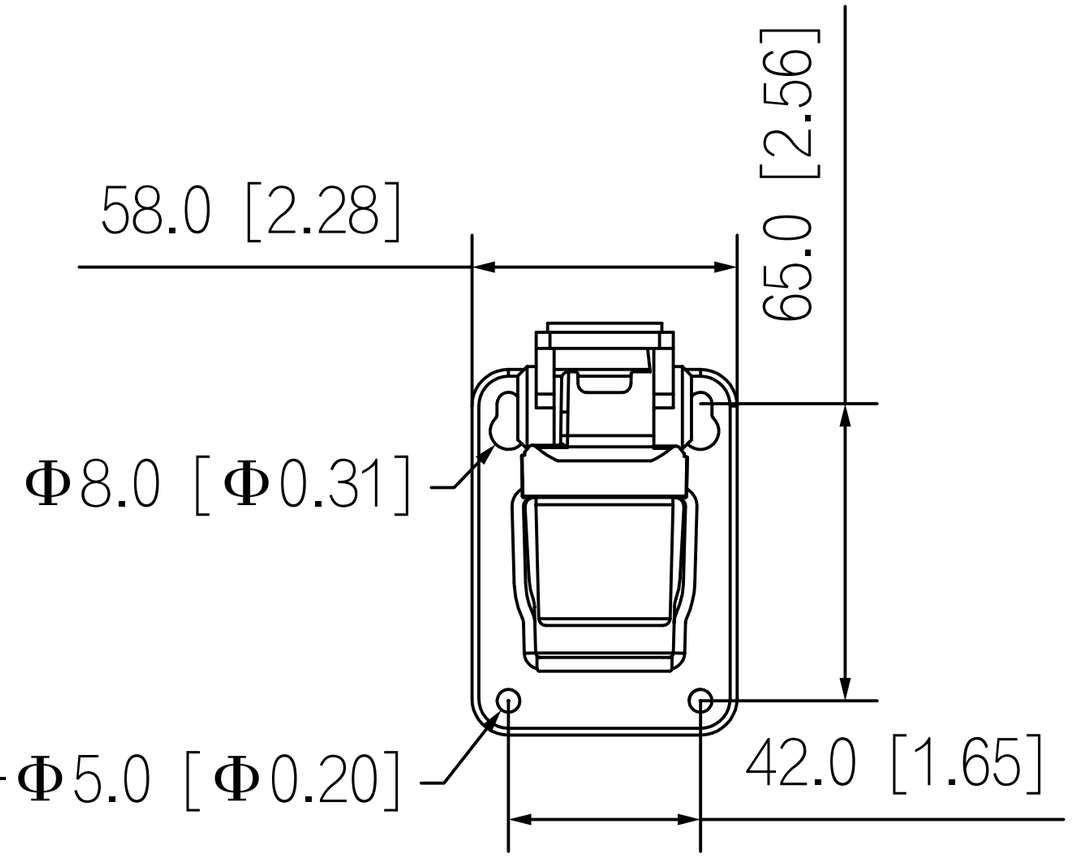
58.0 [2.28]
65.0 [2.56]
Φ8.0 [Φ0.31]
4−Φ5.0 [Φ0.20]
42.0 [1.65]

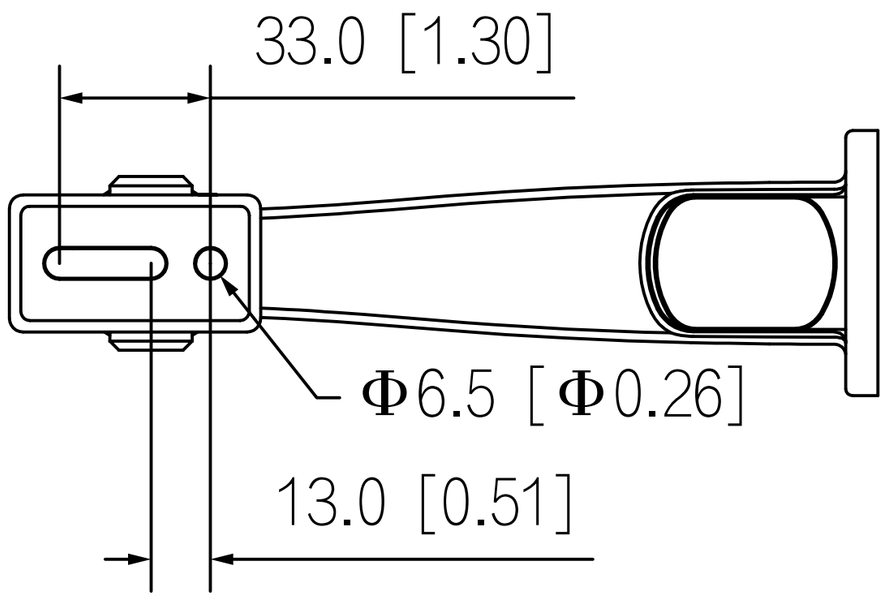
33.0 [1.30]
Φ6.5 [Φ0.26]
13.0 [0.51]